WATERCO
water, the liquid of life

MICRON S602 ECO

Environmentally Friendly Media Filter

Micron S602 ECO media filter features an internal hydraulically efficient system, which facilitates energy and water savings.

- Water savings of up to 30%
- 50mm Multiport Valve, reducing water flow resistance
- Ideal for low powered and energy efficient pumps
- Improved water clarity

SAVE ENERGY
SAVE TIME
SAVE WATER
10 YEAR WARRANTY

enviropro
SAVE TIME, WATER AND ENERGY

www.waterco.com.au

Fiberglass wound construction

Micron S602 ECO filters embody the latest in fibreglass winding technology. Micron fibreglass vessels consist of an inner shell of fibreglass reinforced with multiple layers of continuous strands of fibreglass filaments.

Depth Filtration

The Micron S602 ECO operates on the basis of “Depth Filtration”; dirt is driven through the filter bed and trapped in minute spaces between the particles of filter media allowing the cleansed water to pass through the filter’s laterals and exit via the filter’s Multiport valve.

Simple Maintenance

Cleaning the filter simply requires turning the filter’s Multiport lever from the “filter” position to the “backwash” position, which reverses the flow of water in the filter, flushing the filter bed.

Filter Mode

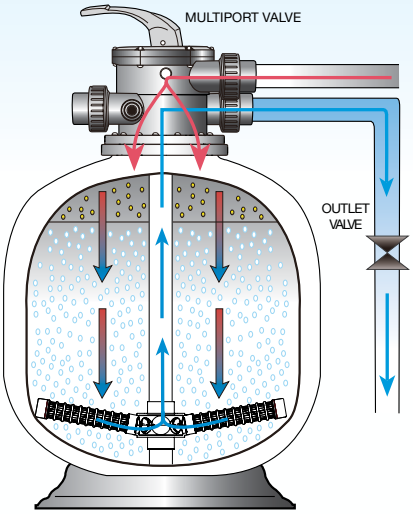

Backwash Mode

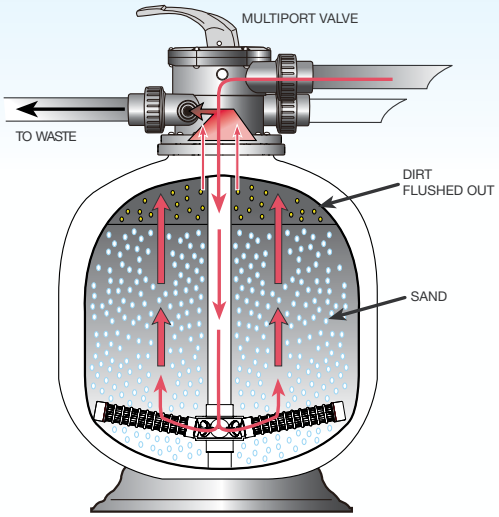

Water Saving “Fish Tail” laterals

Micron S602 ECO is equipped with “Fish Tail” laterals, to improve its filtration and backwashing hydraulic efficiency.

Fish Tail laterals provide effective coverage of the filter bed and balanced water flow, during backwashing.

Micron S602 ECO’s backwash time is significantly reduced, leading to a 30% savings of backwash water.

Conventional filter lateral system

Micron ECO Fish Tail lateral system

Energy Saving “Fish Tail” laterals

The Micron S602 ECO’s hydraulic efficiency halves the backwash flow rate of a conventional sand filter, allowing the option for low powered, energy efficient pumps for filtration flow and backwash flow.

Enhanced Water Clarity

Lowering a filter's flow rate not only significantly decreases the pump's energy requirements, but also reduces water flow resistance in your pool equipment and plumbing.

A lower flow rate also has the added benefit of enhancing your pool's filtration efficiency, greatly enhancing the clarity of your swimming pool water.

50mm Multiport Valve

1. Metric or imperial quick connect unions.
2. Glass filled thermoplastic.
3. Durable lever action handle.
4. 6 way multiple valve positions.
5. High grade stainless steel components.
6. Pressure gauge.
7. Wear resistant rotor.
8. Clear sight glass for backwash inspection.

Reduced Water Flow Resistance

Conventional 24" / 600mm filters are equipped with a 40mm Multiport Valve. The Micron ECO is equipped with a hydraulically efficient 50mm Multiport Valve to reduce the filter's overall resistance to water flow.

Filter Pressure Loss Curves

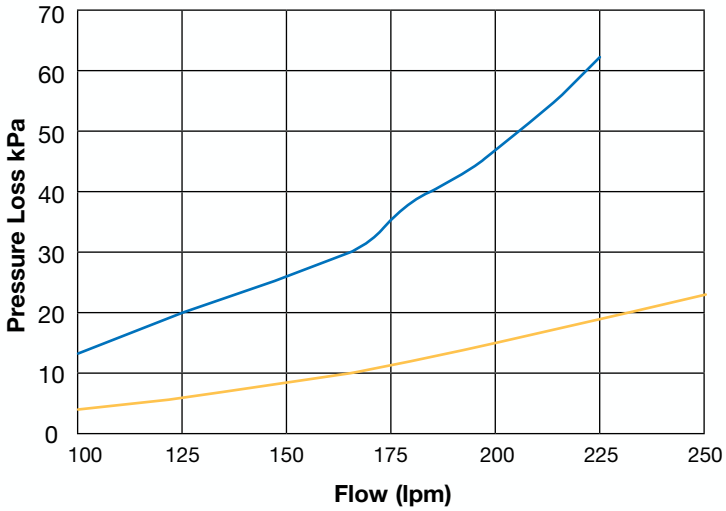

S602 with 50mm Multiport Valve

Conventional filter with a 40mm Multiport Valve

The Micron S602's design combined with its 50mm Multiport valve reduces its pressure loss from 60 kPa (@ 225lpm) down to a very low pressure loss of 20 kPa (@ 225lpm).

The filter's low water flow resistance, facilitates better performance from multi-speed and variable speed pumps.

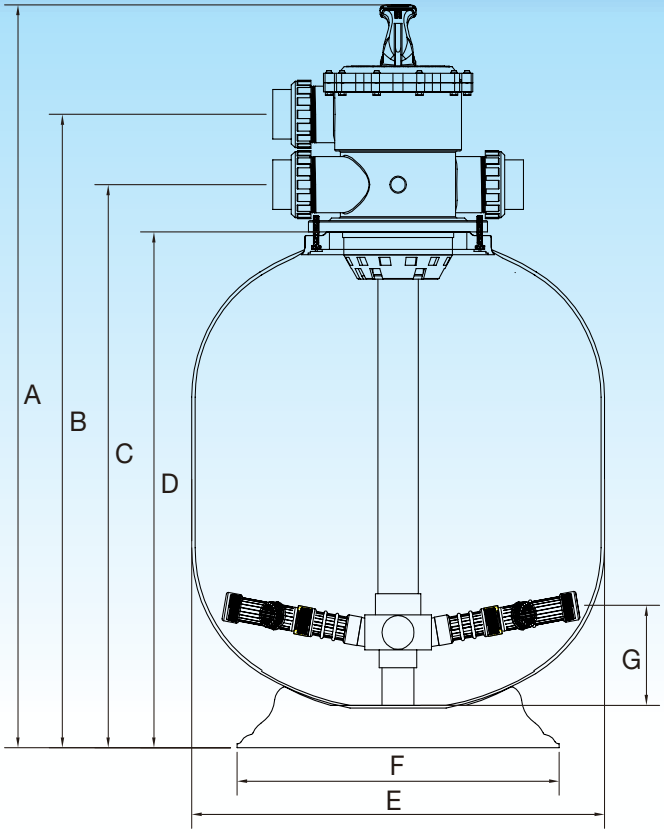

Technical Specification

Model No.	Valve Size (mm)	Inner Dia. (mm)	Filter Area (sq.m²)	Bed Depth (mm)	Max. Flow* (lpm)	Max. Pool Size (litres)	Min. Backwash (lpm)	Media Volume (litres)	Glass Pearl Media (kg)	Sand 16/30 (kg)	Zeolite 1 - 2.2 (kg)
S602 ECO	50	600	0.28	295	226	81,300	189	106	171	155	127

Dimension (mm)

Model	A	B	C	D	E	F	G
S602 ECO	1085mm	905mm	805mm	735mm	622mm	484mm	143mm

Warranty

Micron Filters	10 Years (conditional)
Filter Tank	10 Years
Multi Port Valve & Other components	1 Year
Labour	1 Year

Commercial Installations	5 Years (conditional)
Filter Tank	5 Years (1 year full + 4 years pro rata)
Multi Port Valve & Other components	1 Year

Please refer to Waterco's warranty terms and conditions

OFFICES - AUSTRALIA
NSW - Sydney (Head Office)
Tel: +61 2 9898 8600
QLD - Brisbane
Tel: +61 7 3299 9900
VIC/TAS - Melbourne
Tel: +61 3 9764 1211
WA - Perth
Tel: +61 8 9273 1900
SA/NT - Adelaide
Tel: +61 8 8244 6000
ACT Distribution
Tel: +61 2 6280 6476

OFFICES - OVERSEAS
Waterco (Europe) Limited
Sittingbourne, Kent. UK
Tel: +44 (0) 1795 521 733
Waterco (USA) Inc
Augusta, Georgia, USA
Tel: +1 706 793 7291
Waterco Canada
Longueuil, Quebec, Canada
Tel: +1 450 748 1421
Waterco (NZ) Limited
Auckland, New Zealand
Tel: +64 9 525 7570

Waterco (C) Limited
Guangzhou, China
Tel: +86 20 3222 2180
Waterco (Far East) Sdn Bhd
Selangor, Malaysia
Tel: +60 3 6145 6000
PT Waterco Indonesia
Jakarta, Indonesia
Tel: +62 21 4585 1481
Waterco Singapore Intl Pte Ltd
Nehsons Building, Singapore
Tel: +65 6344 2378

DISTRIBUTED BY:
Chainaris Phuket Engineering Co., Ltd.
63/13 Moo.2 T.Vichit A.Muang Phuket 83000
Line: @chainarisshop Tel: 076-513100-3

ZZB1450 11/17

WATERCO water, the liquid of life

SPASA AUSTRALIAN MEMBER

In the interest of providing better quality and value we are constantly improving and updating our products. Consequently, pictures and information on our brochures may sometimes vary slightly from models available.